इंटरनेट मानक

Disclosure to Promote the Right To Information

Whereas the Parliament of India has set out to provide a practical regime of right to information for citizens to secure access to information under the control of public authorities, in order to promote transparency and accountability in the working of every public authority, and whereas the attached publication of the Bureau of Indian Standards is of particular interest to the public, particularly disadvantaged communities and those engaged in the pursuit of education and knowledge, the attached public safety standard is made available to promote the timely dissemination of this information in an accurate manner to the public.

"जानने का अधिकार, जीने का अधिकार"
Mazdoor Kisan Shakti Sangathan
"The Right to Information, The Right to Live"

"पुराने को छोड नये के तरफ"
Jawaharlal Nehru
"Step Out From the Old to the New"

IS/ISO 342 (1983): Textile Machinery and Accessories - Worsted and Woollen Cards - Width of Cylinder and Width on the Wire (Superseding IS 5938) [TXD 14: Machinery for Fabric Manufacture]

"ज्ञान से एक नये भारत का निर्माण"
Satyanarayan Gangaram Pitroda
"Invent a New India Using Knowledge"

Act Number 22 of 2005
The Indian Parliament
RIGHT TO INFORMATION

Made Available By
Public.Resource.Org

"ज्ञान एक ऐसा खजाना है जो कभी चुराया नहीं जा सकता है"
Bhartṛhari—Nītiśatakam
"Knowledge is such a treasure which cannot be stolen"

BLANK PAGE

BRUTUM FULMEN

IGNORANTIA JURIS NON EXCUSAT

PROTECTED BY COPYRIGHT

IS/ISO 342 : 1983
(Superseding IS 7488 : 1974)
(Reaffirmed 2012)

भारतीय मानक

वस्त्रादि मशीनरी तथा सहायकांग — वर्स्टड तथा ऊनी (वूलन) कार्ड — सिलिंडर की चौड़ाई तथा वायर पर चौड़ाई

Indian Standard

TEXTILE MACHINERY AND ACCESSORIES — WORSTED AND WOOLLEN CARDS — WIDTH OF CYLINDER AND WIDTH ON THE WIRE

ICS 59.120.10

© BIS 1996

BUREAU OF INDIAN STANDARDS
MANAK BHAVAN, 9 BAHADUR SHAH ZAFAR MARG
NEW DELHI 110002

December 1996 **Price Group 1**

NATIONAL FOREWORD

This Indian Standard which is identical with ISO 342 : 1983 'Textile machinery and accessories — Worsted and woollen cards — Width of cylinder and width on the wire', issued by International Organization for Standardization was adopted by the Bureau of Indian Standards on the recommendation of the Spinning Preparatory, Spinning and Doubling (Twisting) Machinery Sectional Committee and approval of the Textile Division Council.

This standard supersedes IS 7488 : 1974 'Working widths of worsted and woollen cards' to ensure harmonization of National Standard with the corresponding International Standard.

Wherever the words 'International Standard' appear as referring to this standard, they should be read as 'Indian Standard'.

In this Indian Standard, ISO 6171 'Textile machinery and accessories — Bead wires and corresponding grooves for cards — Main types and dimensions' is refferred to. Read in its place IS 9568 (Part 2) : 1982 'Metallic card clothing — Bead wires', which is technically equivalent.

Indian Standard

TEXTILE MACHINERY AND ACCESSORIES — WORSTED AND WOOLLEN CARDS — WIDTH OF CYLINDER AND WIDTH ON THE WIRE

1 Scope and field of application

This International Standard defines the width of cylinder and the width on the wire of worsted and woollen cards.

It also specifies a range of preferred values for these widths of cylinder on worsted and woollen cards.

2 Reference

ISO 6171, *Textile machinery and accessories — Bead wires and corresponding grooves for cards — Main types and dimensions.*

3 Definitions and symbols

W = cylinder width (width of main element of cards)

A = width on the wire

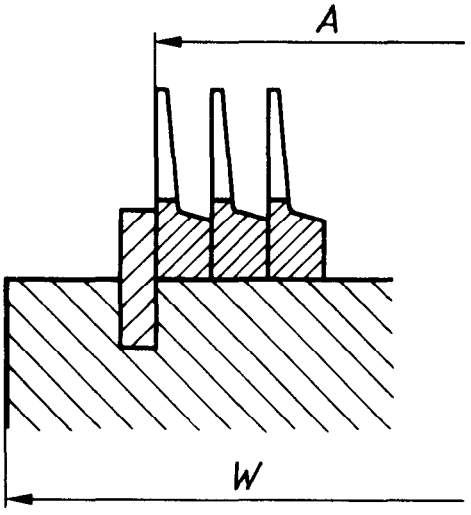

Figure 1 — Example of application with I type of bead wire

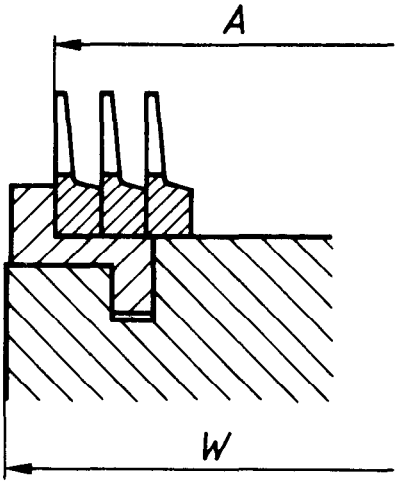

Figure 2 — Example of application with Z type of bead wire

4 Dimensions

The range of preferred values specified for cylinder widths for worsted and carded wool is given in the table.

Table — Recommended values for cylinder widths

Values in millimetres

W	2 000	2 200	2 500	2 800	3 000	3 500
Worsted card	x	x	x	—	—	—
Woollen card	—	—	x	x	x	x

Bureau of Indian Standards

BIS is a statutory institution established under the *Bureau of Indian Standards Act*, 1986 to promote harmonious development of the activities of standardization, marking and quality certification of goods and attending to connected matters in the country.

Copyright

BIS has the copyright of all its publications. No part of these publications may be reproduced in any form without the prior permission in writing of BIS. This does not preclude the free use, in the course of implementing the standard, of necessary details, such as symbols and sizes, type or grade designations. Enquiries relating to copyright be addressed to the Director (Publications), BIS.

Review of Indian Standards

Amendments are issued to standards as the need arises on the basis of comments. Standards are also reviewed periodically; a standard along with amendments is reaffirmed when such review indicates that no changes are needed; if the review indicates that changes are needed, it is taken up for revision. Users of Indian Standards should ascertain that they are in possession of the latest amendments or edition by referring to the latest issue of 'BIS Handbook' and 'Standards : Monthly Additions'.

This Indian Standard has been developed from Doc : No. TX 15 (0286).

Amendments Issued Since Publication

Amend No.	Date of Issue	Text Affected

BUREAU OF INDIAN STANDARDS

Headquarters:

Manak Bhavan, 9 Bahadur Shah Zafar Marg, New Delhi 110002
Telephones : 323 01 31, 323 94 02, 323 83 75

Telegrams: Manaksanstha
(Common to all offices)

Regional Offices:	Telephone
Central : Manak Bhavan, 9 Bahadur Shah Zafar Marg NEW DELHI 110002	323 76 17 323 38 41
Eastern : 1/14 C. I. T. Scheme VII M, V. I. P. Road, Maniktola CALCUTTA 700054	337 84 99, 337 85 61 337 86 26, 337 86 62
Northern : SCO 335-336, Sector 34-A, CHANDIGARH 160022	60 38 43 60 20 25
Southern : C. I. T. Campus, IV Cross Road, MADRAS 600113	235 02 16, 235 04 42 235 15 19, 235 23 15
Western : Manakalaya, E9 MIDC, Marol, Andheri (East) MUMBAI 400093	832 92 95, 832 78 58 832 78 91, 832 78 92

Branches : AHMADABAD. BANGALORE. BHOPAL. BHUBANESHWAR. COIMBATORE. FARIDABAD. GHAZIABAD. GUWAHATI. HYDERABAD. JAIPUR. KANPUR. LUCKNOW. PATNA. THIRUVANANTHAPURAM.

Printed at New India Printing Press, Khurja, India